A-A (4 : 1)

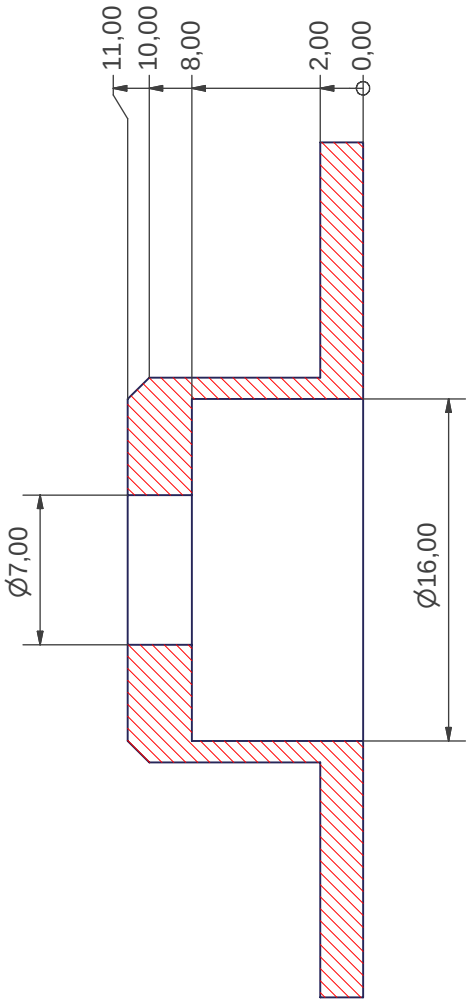

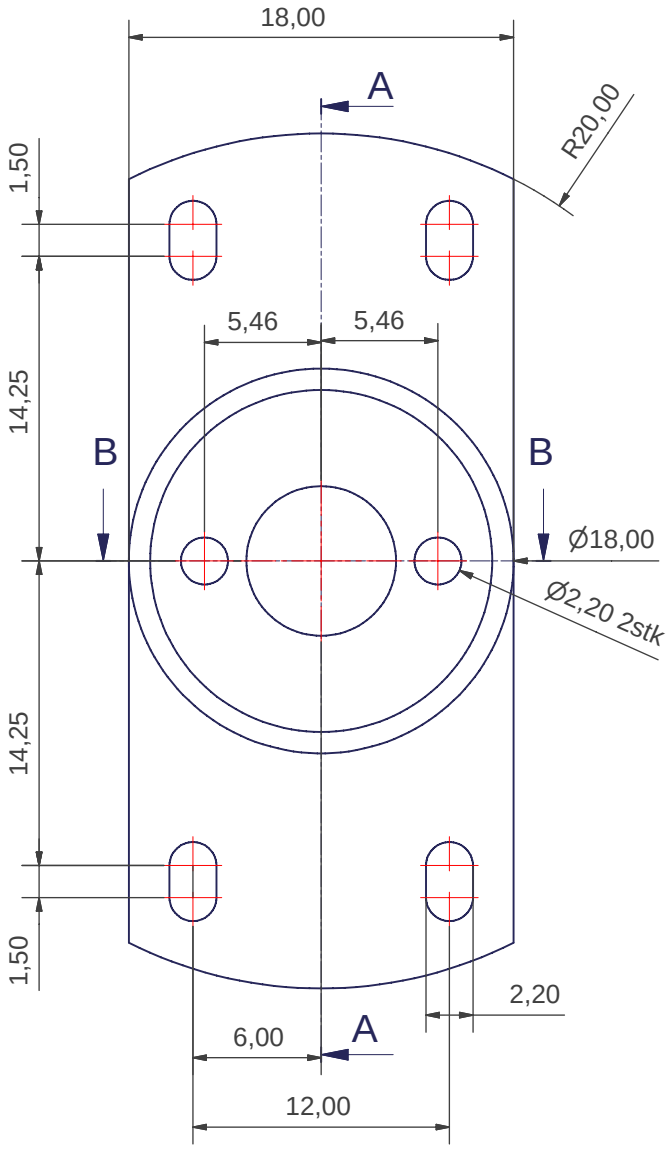

B-B (4 : 1)

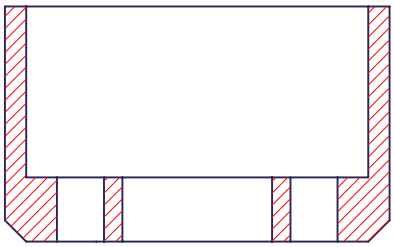

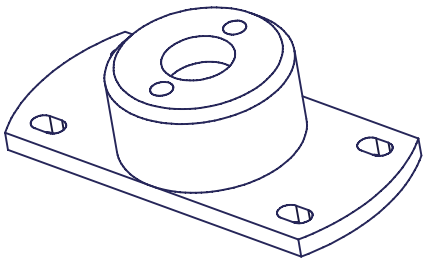

Institute of Physics and Astronomy Aarhus Universitet	IFA	Mtr Aluminum	
		Designer John E. Andersen	
	Project Input V-Block		
	Creation date 13-10-2004	Last saved 27aug04 - 8:48am	5-motormontering	Rev no. A3
Rev / Changes / Date / Name	Q:\Inventor DWG\Søren Frandsen\FIES\Input V-block\Lukker\5-motormontering.ipt		